Installation & Assembly - Suspended Ceiling Kit

Model: CMJ450

Max. UL Load Capacity : 250 lb (113 kg)

***IMPORTANT!* Read entire instruction sheet before you start assembly and installation.**

PART #	QTY.	DESCRIPTION
A 1455-476W	1	ceiling tray
B 520-9401	8	M6 x 10 mm long phillips screw
C 520-9402	4	M6 x 20 mm long phillips screw
D 1452-278	4	hanger bracket
E 1452-279	4	hanger bracket clamp
F 560-9620	4	turnbuckle
G 1450-522	1	20' (6.1m) tie wire (not shown)
H 1450-517	1	safety cable (not shown)
J 1450-518	2	safety cable clamp
K 580-0006	5	eye bolt
L 580-0005	5	concrete anchor
M 505-9010	1	M5 x 10 mm penta pin screw
N 520-9249	1	M5 x 1" penta pin driver

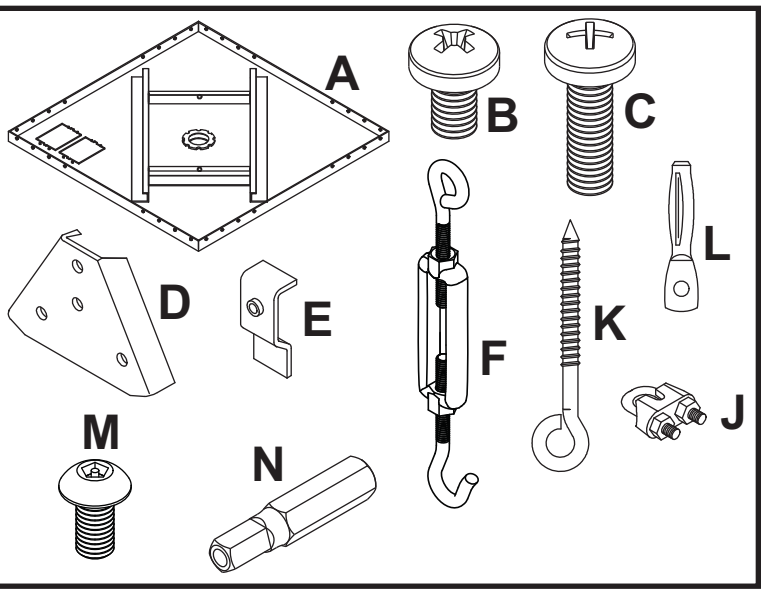

⚠ WARNING

- Weight of TV or screen shall not exceed maximum UL load capacity.

IMPORTANT PRE-ASSEMBLY INFORMATION:

Ceiling Tray (**A**) is designed to fit within a 24" (610 mm) x 24" (610 mm) section of a conventional suspended ceiling system. Ceiling runners (see **DETAIL 1, page 2**) should have a "T" cross section and a minimum height of 1.5" (38 mm). In cases where 24" (610 mm) x 48" (1219 mm) ceiling tiles are used, cut one tile in half and add another 24" (610 mm) ceiling runner in order to make a 24" (610 mm) x 24" (610 mm) section.

For certain installations it may be best to install ceiling anchors (step 3) before installing the ceiling tray (step 2).

1 **For FLUSH MOUNT TUBE Installation:** From the top, thread the Flush Mount Tube (not included) through center of ceiling tray (**A**).

Skip to step step 2.

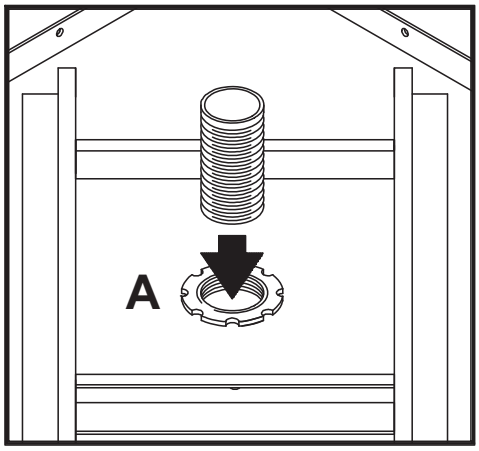

2 **For EXTENSION COLUMN Installation:** From the bottom up, thread extension column (not included) up through retaining collar in adjustable collar mount plate. Align notch in extension column with hole in collar and fasten using M5 x 10 mm penta pin screw (**M**) with M5 penta pin driver (**N**) as shown below.

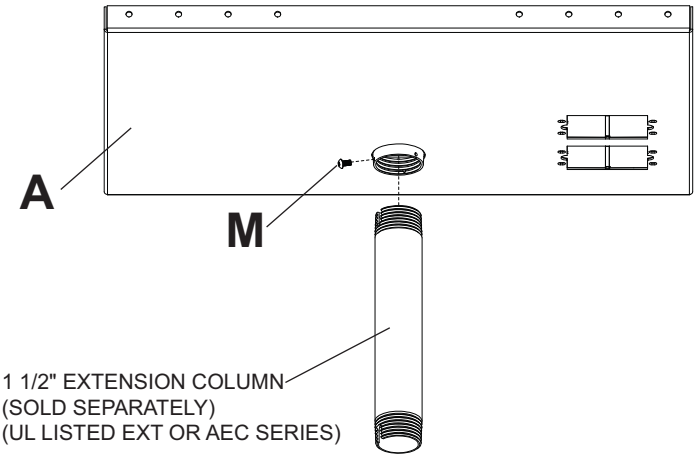

3 Attach four Hanger Brackets (**D**) to four corners of Ceiling Tray (**A**) using 10 mm long phillips screws (**B**). Place Ceiling Tray (**A**) into 24" (610mm) x 24" (610mm) opening in ceiling (in place of a ceiling tile). Clamp Ceiling Tray (**A**) to Ceiling Runners using Hanger Bracket Clamps (**E**) and 20 mm long phillips screws (**C**). Hook Turnbuckles (**F**) into Hanger Brackets (**D**).

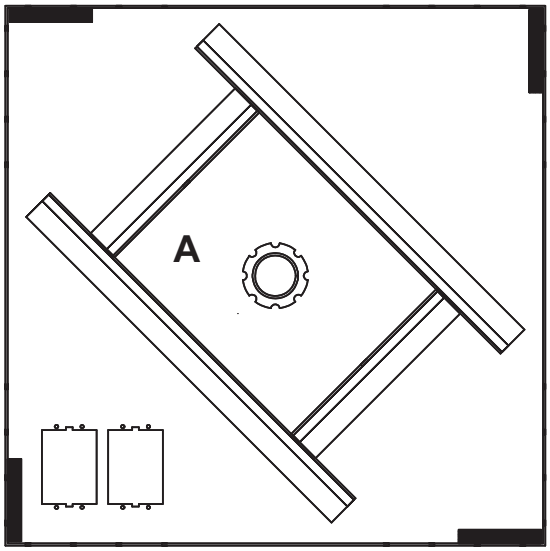

TOP VIEW - CEILING TRAY
Black rectangles show correct positions for Hanger brackets.

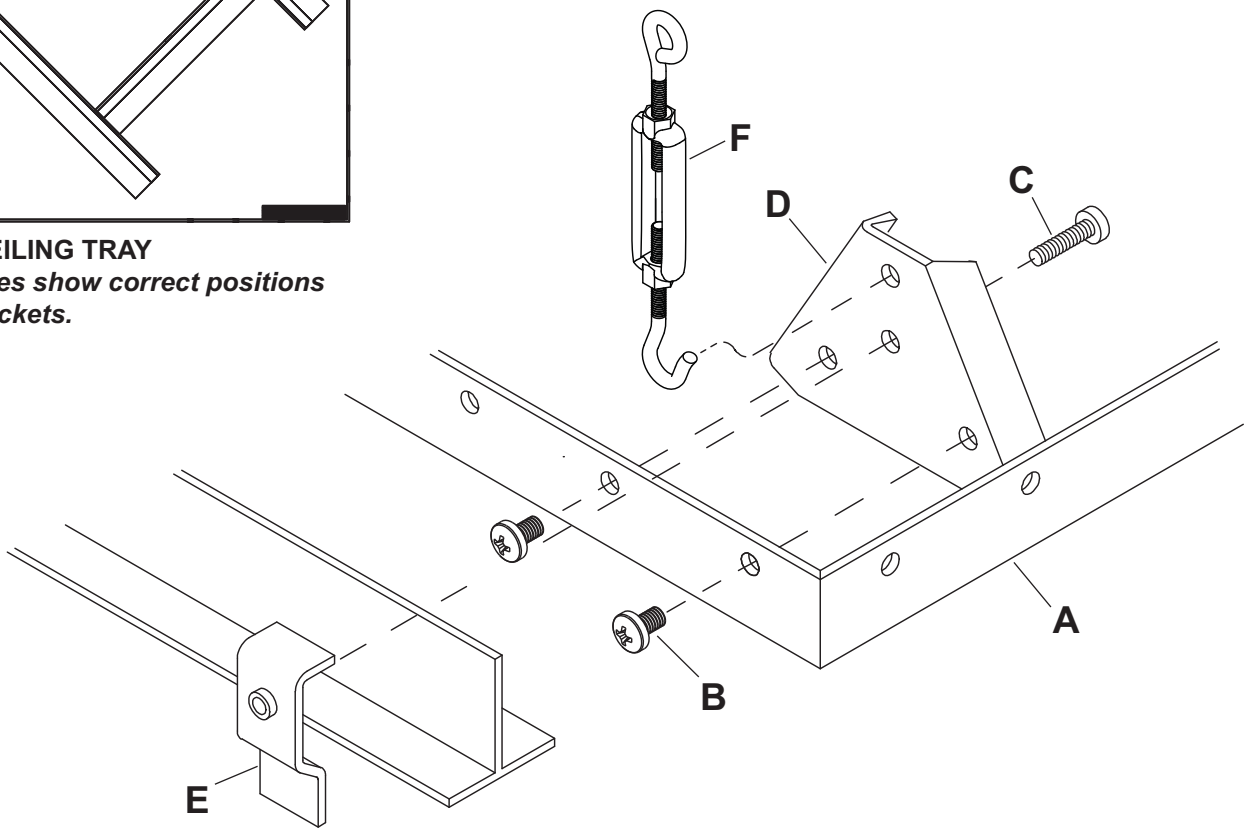

4 Cut tie wire (**G**) into four pieces of equal length. Insert wires through ends of turnbuckles. Twist each wire around itself at least four times.

Drill holes for four ceiling anchors (see “Various Anchoring Methods"). Position the holes so that when the tie wires (**G**) when attached and taut will angle out at 15°. Drill a fifth anchor hole directly above the **center** of the ceiling tray.

Pull tie wires tight and attach to ends of ceiling anchors (or truss). Again twist each wire around itself at least four times.

When this step is complete, the weight of the ceiling tray should be supported by the tie wires.

Note: 20’ (6.1 m) of tie wire (**G**) is provided. If space between the true ceiling and suspended ceiling is more than 36" (914 mm), additional wire (12 gauge annealed, steel, black) will be needed.

VARIOUS ANCHORING METHODS (Max. UL Load Capacity : 250 lbs. (113 kg)

Wood Joists or Beams
Drill 5/32" (4 mm) dia holes 2" (51 mm) deep. Fully insert eye bolts (**K**).

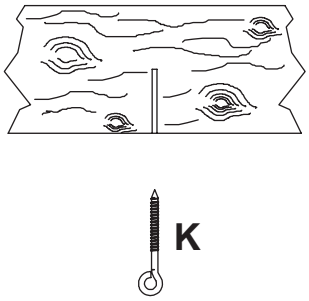

Solid Concrete
Drill 1/4" (6 mm) dia. holes 1.5" (38 mm) deep. Hammer in Concrete Anchor (**L**) using Rawl #3250 setting tool or equivalent.

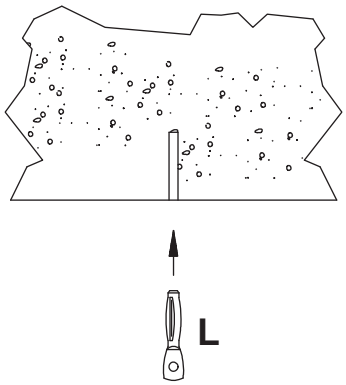

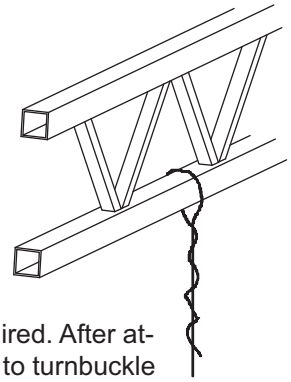

Truss Ceiling
No anchor required. After attaching tie wire to turnbuckle loop upper end around ceiling truss. Pull tie wire tight and twist it around itself at least four times.

⚠ WARNING

- Installer must verify that the ceiling will safely support four times the combined weight of all attached equipment and hardware.

5 Run the safety cable (**H**) through the remaining ceiling anchor. Pass each end through holes in ceiling plate reinforcements and join with cable clamp (**J**). **DO NOT TIGHTEN YET!**

Suspended Ceiling Kit installation is now complete. After all components (Jumbo Mount, Extension Column, etc.) and equipment (monitor, VCR, etc.) have been attached, tension the tie wires by adjusting turnbuckles (**F**). **Load must be carried by tie wires - not suspended ceiling runners**. Finally, take up the slack in safety cable (**H**) leaving it slightly loose. Tighten both safety cable clamps (**J**).

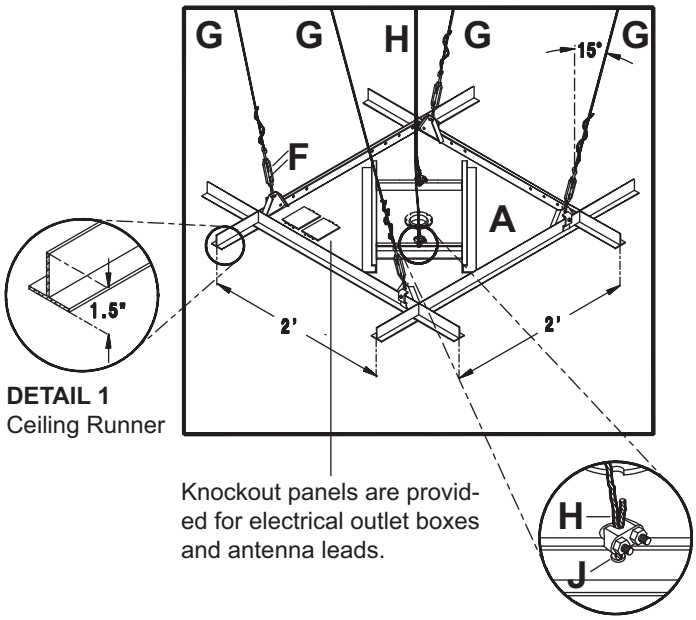

DETAIL 1
Ceiling Runner

Knockout panels are provided for electrical outlet boxes and antenna leads.

DETAIL 2
Safety Cable and Cable Clamp.

Visit the Peerless Web Site at www.peerlessindustries.com For customer service call 1-800-729-0307 or 708-865-8870.
© 2004 Peerless Industries, Inc. All rights reserved.
Peerless is a registered trademark of Peerless Industries, Inc.
All other brand and product names are trademarks or registered trademarks of their respective owners.

LIMITED FIVE-YEAR WARRANTY

Peerless Industries, Inc. establishes a warranty period of five years for products manufactured or supplied by Peerless. This period commences from the date of sale of the product to the original consumer, but will in no case last for more than six years after the date of the product's manufacture. During the warranty period such products will be free from defects in material and workmanship, provided they are installed and used in compliance with the instructions established by Peerless Industries, Inc. Subject to applicable legal requirements, during the warranty period Peerless will repair or replace, or refund the purchase price of, any such product which fails to conform with this warranty.

Any other warranties prescribed by the law which may apply with respect to such products also are limited in duration to the warranty period specified in this Limited Five-Year Warranty.

This warranty does not cover damage caused by (a) service or repairs by the customer or a person who is not authorized for such service or repairs by Peerless Industries, Inc., (b) the failure to utilize proper packing when returning the product, (c) incorrect installation or the failure to follow Peerless' instructions or warnings when installing, using or storing the product, or (d) misuse or accident, in transit or otherwise, including in cases of third party actions and force majeure.

In no event shall Peerless be liable for incidental or consequential damages or damages arising from the theft of any product, whether or not secured by a security device which may be included with the product.

This Limited Five-Year Warranty is in lieu of all other warranties, expressed or implied, and is the sole remedy with respect to product defects. No retailer, dealer, distributor, installer or other person is authorized to modify or extend this warranty or impose any obligation on Peerless in connection with the sale of any product manufactured or supplied by Peerless.

This warranty gives specific legal rights, and you may also have other rights provided by the national legislation of the country in which you purchased such product.

peerless®

www.peerlessmounts.com

© 2008 Peerless Industries, Inc.

ISSUED: 6-5-95 SHEET NO: 128-9004-6 06-10-10

Visit the Peerless Web Site at www.peerlessindustries.com

For customer service call 1-800-729-0307 or 708-865-8870.

© 2008, Peerless Industries, Inc. All rights reserved.
All other brand and product names are trademarks or registered trademarks of their respective owners.